- **Elasticity**
- So far we have assumed that objects remain rigid when external forces act on them **Except springs.**
- Actually ,all objects are deformable to some extent .
- It is possible to change the size and/or shape of the object by applying external forces.
- Internal forces resist the deformation.
- **Stress:** Is proportional to the force causing the deformation .It is the external force acting on the object per unit cross-sectional area.

  $S = F/A$

- **Strain** (S_t): Defined as the fractional change in length. Is the result of a stress .Is a measure of the degree of deformation.

  $$S_t = \Delta L / l_1$$

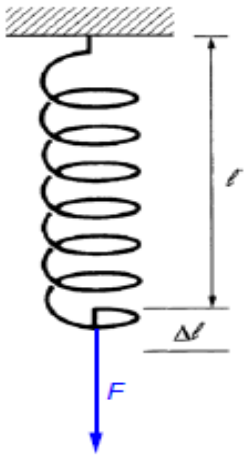

A stretched spring.

- **Elastic Modulus:**
- The elastic modulus is the constant of proportionality between the stress and the strain .
- For sufficiently small stresses, the stress is directly proportional to the strain.

It depends on the material being deformed.

It also depends on the nature of the deformation.

- The elastic modulus, in general, relates what is done to a solid object to how that object responds.
- Eelastic modulus $= \frac{\text{stress}}{\text{strain}}$

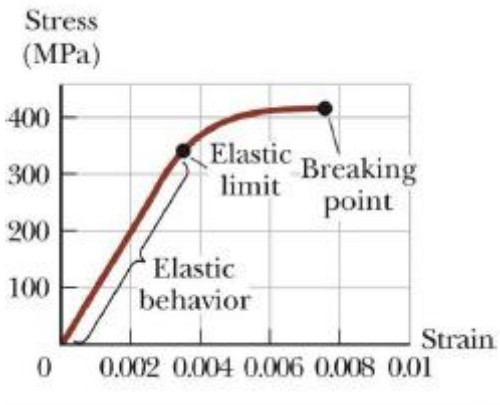

- **Hooke's Law**: For an elastic material, the stress is directly proportional to the strain. This is the elastic behavior part of the curve
- Various types of deformation have unique elastic moduli .

1. **Young's Modulus** :Measures the resistance of a solid to a change in its length.
2. **Shear Modulus** :Measures the resistance of motion of the planes within a solid parallel to each other.
3. **Bulk Modulus** :Measures the resistance of solids or liquids to changes in their volume

- **Young's Modulus**
- Young's Modulus: A measure of a material's stiffness. A higher Y means the material is stiffer and harder to stretch or compress (e.g., steel vs. muscle).
- Elastic Limit & Strength: If stress exceeds a material's elastic limit, permanent deformation occurs. If it exceeds the rupture or breaking strength (S_B), the material fails (fractures).
- The bar is stretched by an amount ΔL under the action of the force F.
- The tensile stress is the ratio of the magnitude of the external force to the cross-sectional area A.
- The tensile strain is the ratio of the change in length to the original length.
- Young's modulus ,Y , is the ratio of those two ratios:

$$Y = \frac{\text{tensile stress}}{\text{tensile strain}} = \frac{F/A}{\Delta L/l_1}$$ Units are $N/m^2 = Pascal$

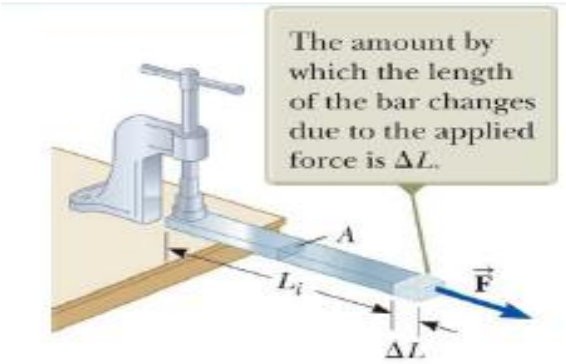

- **Shear Modulus:**
- Another type of deformation occurs when a force acts parallel to one of its faces while the opposite face is held fixed by another force. This is called a shear stress .
- For small deformations, no change in volume occurs with this deformation.
- A good first approximation .

The shear strain is $\Delta x/h$.

Δx is the horizontal distance the sheared face moves & h is the height of the object .

The shear stress is F/A

F is the tangential force & A is the area of the face being sheared.

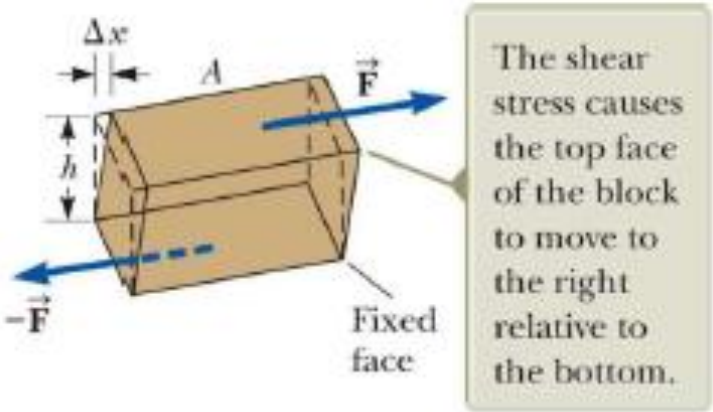

- The shear modulus is

$$S = \frac{\text{Shear stress}}{\text{Shear strain}} = \frac{F/A}{\Delta x/h}$$ Units are N/m^2 .

Example:

Shear stress on the spine:

Between each pair of vertebrae of the spine is a disc of cartilage of thickness 0.5 cm. Assume the disc has a radius of 0.4 m. The shear modulus of cartilage is $1 * 10^7 N/m^2$. A shear force of 10 N is applied to one end of the disc while the other end is held fixed. (a) What is the resulting shear strain? (b) How far has one end of the disc moved with respect to the other end?

Solution:

- (a) The shear strain is caused by the shear force,

$$\text{Strain} = \frac{F}{AS} \quad = \frac{10N}{\pi(0.04\ m)^2(1*10^7)N/m^2} = 1.99 * 10^{-4}$$

- (b) A shear strain is defined as the displacement over the height,

$$Stress = \frac{\Delta x}{h} \quad \& \quad \Delta\text{x} \quad = \text{h} * \text{Strain} \quad = 0.5\ \text{cm} * 1.99 * 10^{-4}$$
$$= 0.99\ \mu\text{m}$$

- **Bulk Modulus**

- Another type of deformation occurs when a force of uniform magnitude is applied perpendicularly over the entire surface of the object.
- The object will undergo a change in volume, but not in shape.
- The volume stress is defined as the ratio of the magnitude of the total force ,F , exerted on the surface to the area ,A , of the surface.
- This is also called the pressure.
- The volume strain is the ratio of the change in volume to the original volume.
- The bulk modulus is the ratio of the volume stress to the volume strain.

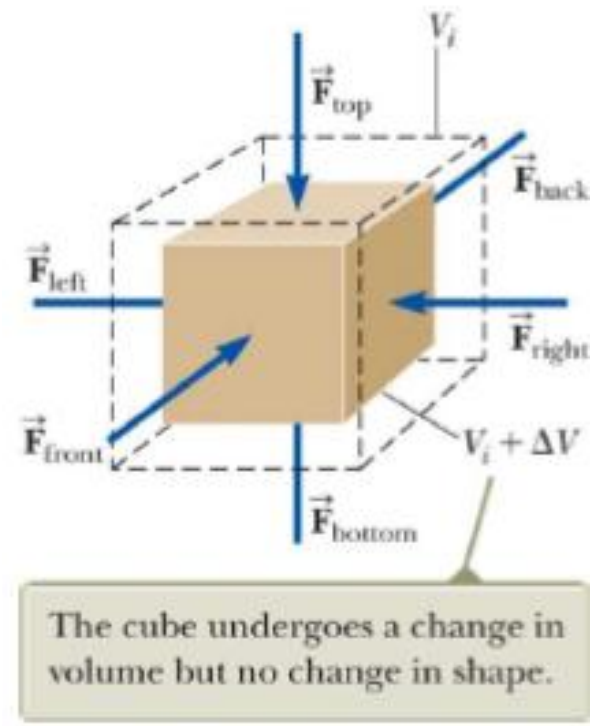

$$B = \frac{\text{volume stres}}{\text{volume strain}} = \frac{\Delta F/A}{\Delta V/V_1} = \frac{\Delta P}{\Delta V/V_1}$$

·The negative indicates that an increase in pressure will result in a decrease in volume.

· The compressibility is the inverse of the bulk modulus.

❖ **Moduli and Types of Materials**

· Both solids and liquids have a bulk modulus.

· Liquids cannot sustain a shearing stress or a tensile stress.

· If a shearing force or a tensile force is applied to a liquid, the liquid will flow in response.

Typical Values for Elastic Moduli

Substance	Young's Modulus (N/m^2)	Shear Modulus (N/m^2)	Bulk Modulus (N/m^2)
Tungsten	35×10^{10}	14×10^{10}	20×10^{10}
Steel	20×10^{10}	8.4×10^{10}	6×10^{10}
Copper	11×10^{10}	4.2×10^{10}	14×10^{10}
Brass	9.1×10^{10}	3.5×10^{10}	6.1×10^{10}
Aluminum	7.0×10^{10}	2.5×10^{10}	7.0×10^{10}
Glass	$6.5–7.8 \times 10^{10}$	$2.6–3.2 \times 10^{10}$	$5.0–5.5 \times 10^{10}$
Quartz	5.6×10^{10}	2.6×10^{10}	2.7×10^{10}
Water	—	—	0.21×10^{10}
Mercury	—	—	2.8×10^{10}

- **The Spring Analogy:**
  The elastic behavior of a material is compared to a simple spring.
- **Spring Force:**

$$F = -k\Delta l,$$ where K is the spring constant.

· Energy Stored in a Spring:

$$E = \frac{1}{2}k(\Delta l)^2 \cdot$$

- By comparing Hooke's law for a bar $F = \frac{yA}{l}\Delta l$ to the spring equation, we find the equivalent spring constant for a material is

$$K = \frac{yA}{l}$$

· Therefore, the elastic potential energy stored in a stretched or compressed material is:

$$E = \frac{1}{2}\frac{yA}{l}(\Delta l)^2$$

Example:

What is the spring constant of human femur under compression of average cross-sectional area $10^{-3}m^2$ and length $0.4\,m^2$?

Young's modulus for the bone is $1.5 * 10^{10} N/m^2$

$$\boldsymbol{k} = \frac{\boldsymbol{YA}}{\boldsymbol{I_0}} = \frac{1.5 * 10^{10} * 10^{-3}}{0.4} = 3.75 \times \mathbf{10^6}\ \boldsymbol{N/m}$$

H.W

1. The average cross-sectional area of a woman femur is $10^{-3}m^2$and it is 0.4 m long .The woman weighs 750 N) .a (What is the length change of this bone when it supports half of the weight of the woman? (b) Assuming the stress-strain relationship is linear until fracture, what is the change in length just prior to fracture?

H.W:

2. A 200 kg load is hung on a wire having a length of 4.00 m, cross-sectional area 10 $0.200 * 10^{-4}m^2$ and Young's modulus $8.00 * 10^{10}N/m^2$ What is its increase in length?

3. Assume that Young's modulus for bone is $1.5 * 10^{10}N/m^2$ and that a bone will fracture if more than $1.5 * 10^{8}N/m^2$ is exerted. (a) What is the maximum force that can be exerted on the femur bone in the leg if it has a minimum effective diameter of 2.5 cm? (b) If a force of this magnitude is applied compressively, by how much does the 25.0-cm-long bone shorten?

4. A man's leg can be thought of as a shaft of bone 1.2 m long. If the strain is $1.3 * 10^{-4}$ when the leg supports his weight, by how much is his leg shortened?

- **Application to Bone Fracture - Energy Method:**
  calculates the energy required to fracture a bone.
- · Using the formula for energy at the breaking point ($\boldsymbol{\Delta l = s_B\, l/y}$) they derive:

$$\boldsymbol{E = \frac{1}{2}\frac{AlS_B^{2\cdot}}{Y}}$$

- Example: For two leg bones ($l \approx 90\text{cm}, A \approx 6cm^2$), $usingbone's\ S_B = 10^9 dyn/cm^2$and $Y = 14 * 10^{10}\ dyn/cm^2$, the total energy absorbed at fracture is calculated to be 385 Joules.
- This energy is equivalent to a 70 kg person jumping from a height of 56 cm. If all this energy is absorbed by the bones without any yielding (e.g., by bending joints), a fracture is likely.